A Protocol Hierarchy is a fixed set of rules and conventions that govern the communication between two or more computers. The hierarchical structure allows for modular design, interoperability, and ease of implementation in computer networks.

What is Protocol?

A protocol is simply defined as a set of rules and regulations for data communication. Rules are defined for every step and process at the time of communication among two or more computers. Networks are needed to follow these protocols to transmit the data successfully. All protocols might be implemented using hardware, software, or a combination of both of them. There are three aspects of protocols given below :

- **Syntax** - It is used to explain the data format that is needed to be sent or received.
- **Semantics** - It is used to explain the exact meaning of each of the sections of bits that are usually transferred.
- **Timings** - This is used to explain the exact time at which data is generally transferred along with the speed at which it is transferred.

Protocol Hierarchies

Generally, Computer networks are comprised of or contain a large number of hardware and software. For network design, various networks are organized and arranged as a stack of layers of hardware and software, one on top of another. The number, name, content, and function of each layer might vary and can be different from one network to another. The main purpose of each layer is to provide services to higher layers that are present. Every layer has some particular task or function. The networks are organized and arranged as different layers or levels simply to reduce and minimize the complexity of the design of network software.

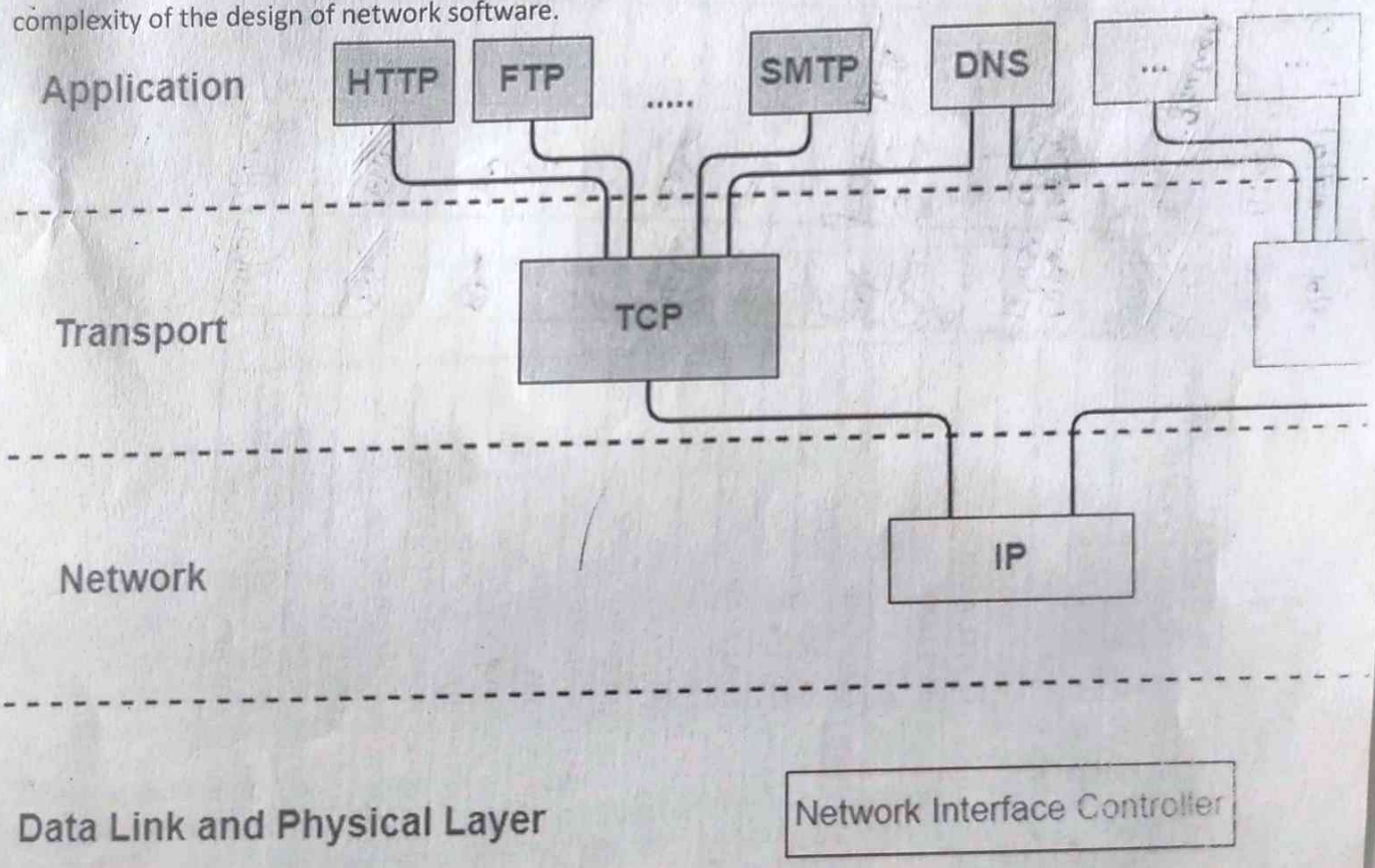

Protocol Hierarchy

Example of Protocol Hierarchy

Below is diagram representing a five-layer network. The diagram shows communication between Host 1 and Host 2. The data stream is passed through a number of layers from one host to other. Virtual communication is represented using dotted lines between peer layers. Physical communication is represented using solid arrows between adjacent layers. Through physical medium, actual communication occurs. The layers at same level are commonly known as peers. The peer basically has

a set of communication protocols. An interface is present between each of layers that are used to explain services provided by lower layer to higher layer.

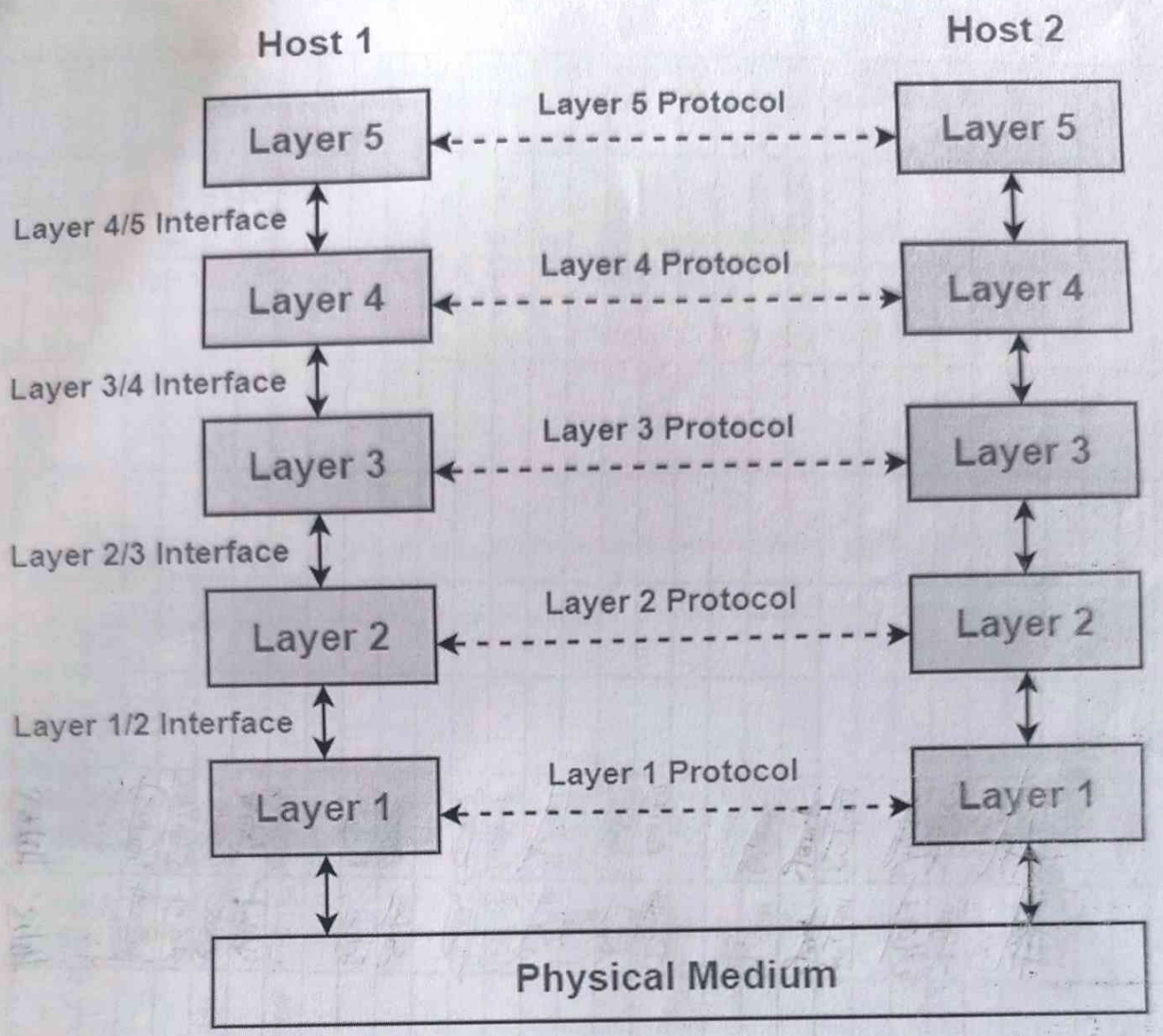

Physical Hierarchies

Advantages of Protocol Hierarchy

- The layers generally reduce complexity of communication between networks
- It increases network lifetime.
- It also uses energy efficiently.
- It does not require overall knowledge and understanding of network.

Disadvantages of Protocol Hierarchy

- Protocol Hierarchy require a deep understanding of each layers of OSI model.
- Implementation of protocol hierarchy is very costly.
- Every layer in protocol hierarchy introduce overheading in terms of memory, bandwidth and processing.
- Protocol Hierarchy is not scalable for complex networks.

In computer networks, communication between devices can occur in two distinct ways - connection-oriented and connectionless services. These two types define how data is transmitted between a source and a destination and differ mainly in their reliability, sequencing and connection setup mechanisms.

Note: *Connection-oriented services establish a link before data transmission begins, ensuring reliability. while, connectionless services send data without establishing a connection, offering faster but less reliable communication.*

Connection-Oriented Service

A connection-oriented service establishes a dedicated communication path between the sender and receiver before any data is transferred. This process involves a handshake to set up the connection, ensuring both parties are ready for communication.

Connection-Oriented Service

- Once the connection is established, data packets are transmitted sequentially and reliably.
- The connection remains active until all data has been successfully transferred. Afterward, the connection is terminated.
- A common example of a connection-oriented service is TCP (Transmission Control Protocol), which guarantees error-free and in-order delivery of packets.

Examples:

- **TCP (Transmission Control Protocol):** used for reliable data transfer in applications like HTTP, FTP and email.
- **Telephone calls:** where a dedicated communication channel is established between two users.

Key Features:

- **Dedicated Connection:** A logical/physical link is established before data transfer.
- **Reliable Transmission:** Error detection, acknowledgment and retransmission mechanisms ensure reliability.
- **Sequencing:** Packets arrive in the correct order.
- **High Overhead:** Extra resources are used to establish and maintain the connection.

Advantages:

- Reliable and error-free data delivery
- Guaranteed data sequencing
- Suitable for large, continuous data transfers
- Ensures retransmission of lost data

Disadvantages:

- Higher latency due to connection setup
- Greater resource consumption
- Less efficient for small or one-time messages

Connectionless Service

A connectionless service transmits data packets without first establishing a dedicated path between sender and receiver. Each packet (often called a datagram) is treated independently and may follow different routes to reach the destination.

Connectionless Service

- There is no guarantee of delivery order, reliability or error correction, but the transmission is faster and more scalable.

- The most common example is UDP (User Datagram Protocol), used in real-time applications where speed is more important than reliability.

Examples:

- **UDP (User Datagram Protocol):** used for DNS queries, streaming and gaming.
- **Postal services analogy:** letters are sent independently, without confirmation of delivery.

Key Features:

- **No Connection Setup:** Data is sent immediately.
- **Independent Packets:** Each packet travels separately.
- **Faster Transmission:** No overhead for connection management.
- **Unreliable:** Packets may be lost or arrive out of order.

Advantages:

- Low latency and faster communication
- Efficient for small or time-sensitive data transfers
- Scalable for large networks with multiple users
- Simple implementation and less overhead

Disadvantages:

- No error control or acknowledgment
- Packets can be lost, duplicated or reordered
- Not suitable for large or critical data transmissions

Difference Between Connection-Oriented and Connectionless Services

Parameter	Connection-Oriented Service	Connectionless Service
Connection Setup	Requires a connection before data transfer	No connection setup needed
Reliability	Reliable; ensures delivery, error detection and retransmission	Unreliable; no delivery or error guarantee
Data Sequencing	Packets delivered in correct order	Packets may arrive out of order
Overhead	High due to connection management	Low; no connection maintenance

Parameter	Connection-Oriented Service	Connectionless Service
Speed	Slower due to setup and acknowledgments	Faster as data is sent directly
Resource Usage	Consumes more resources (buffers, control info)	Minimal resource usage
Best Suited For	File transfer, web browsing, emails (TCP)	Streaming, DNS, VoIP (UDP)
Example Protocol	TCP (Transmission Control Protocol)	UDP (User Datagram Protocol)

The TCP/IP model is a framework that is used to model the communication in a network. It is mainly a collection of network protocols and organization of these protocols in different layers for modeling the network.

- The original TCP/IP standard (defined in RFC 1122) consists of four layers: Application, Transport, Internet, and Network Access.
- In practice and teaching, it is often shown as a 5-layer model by separating the Physical layer from the Network Access layer. This helps clearly distinguish physical hardware (cables, signals) from data framing and MAC addressing.
- While the OSI model has seven layers, the 5 layer TCP/IP model is simpler and commonly used in today's Internet and networking systems.

Role of TCP/IP

One of its main goals is to make sure that the data sent by the sender arrives safely and correctly at the receiver's end. To do this, the data is broken down into smaller parts called packets before being sent. These packets travel separately and are reassembled in the correct order when they reach the destination.

TCP/IP Connection

Note: *This helps prevent errors and makes sure the message is complete and accurate.*

Layers of TCP/IP Model

TCP/IP Layers

1. Application Layer

The Application Layer is the top layer of the TCP/IP model and the one closest to the user. This is where all the apps you use like web browsers, email clients, or file sharing tools connect to the network.

Application Layer

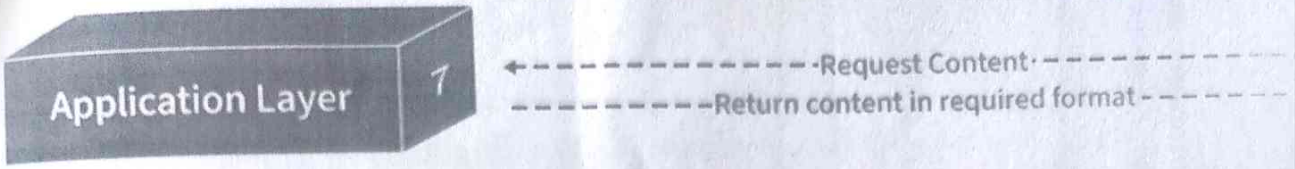

Application Layer

- It acts like a bridge between your software (like Chrome, Gmail, or WhatsApp) and the lower layers of the network that actually send and receive data.
- It supports different protocols like HTTP (for websites), FTP (for file transfers), SMTP (for emails), and DNS (for finding website addresses).
- It also manages things like data formatting, so both sender and receiver understand the data, encryption to keep data safe, and session management to keep track of ongoing connections.

2. Transport Layer

The Transport Layer is responsible for making sure that data is sent reliably and in the correct order between devices. It checks that the data you send like a message, file, or video arrives safely and completely.

This layer mainly uses two protocols: TCP and UDP, depending on whether the communication needs to be more reliable or faster.

Transport Layers

TCP (Transmission Control Protocol): TCP is used when data must be **error-free, complete, and in order**. Examples: loading websites, downloading files, sending emails. It's features are:

- Checks for errors in data
- Resends lost or damaged data
- Ensures everything arrives in the right order
- Provides reliable, connection-oriented communication

UDP (User Datagram Protocol): UDP is used when **speed is more important than perfect accuracy**. Examples: live streaming, online gaming, VoIP calls. It's features are:

- No error checking
- No retransmission of lost data
- No guarantee of order
- Fast and lightweight

3. Internet Layer

The Internet Layer (also known as the Network Layer) is responsible for routing data across different networks to ensure it reaches the correct destination. While the Transport Layer handles "how" data is sent, the Internet Layer handles "where" it goes.

It acts like the postal service of the network, taking segments from the Transport Layer and placing them into "envelopes" called packets with a destination address.

- IP Addressing: Assigns unique IP addresses (like 192.168.1.1) to identify every device on the network.

- Routing: Calculates the most efficient path for packets to travel across the internet to reach their destination.
- Main Protocols: IP, ICMP and ARP.

Internet Layer

4. Network Access (Link Layer)

The Internet Layer is used for finding the best path for data to travel across different networks so it can reach the right destination. It works like a traffic controller, helping data packets move from one network to another until they reach the correct device.

- Framing: Wraps IP packets into Frames and adds physical MAC addresses for local delivery.
- Physical Delivery: Converts digital bits (1s and 0s) into electrical signals, light pulses (fiber), or radio waves (Wi-Fi).
- Hardware Interaction: Manages the actual Network Interface Cards (NIC), Ethernet cables, and wireless drivers.

Network Access (Link Layer)

Working of TCP/IP Model

The working of TCP/IP can be explained with the help of the diagram given below and explained:

Working of TCP/IP Model

When Sending Data (From Sender to Receiver)

- **Application Layer**: Prepares user data using protocols like HTTP, FTP, or SMTP.
- **Transport Layer (TCP/UDP)**: Breaks data into segments and ensures reliable (TCP) or fast (UDP) delivery.
- **Internet Layer (IP)**: Adds IP addresses and decides the best route for each packet.
- **Link Layer (Network Access Layer)**: Converts packets into frames and sends them over the physical network.

When Receiving Data (At the Destination)

- **Link Layer**: Receives bits from the network and rebuilds frames to pass to the next layer.
- **Internet Layer**: Checks the IP address, removes the IP header, and forwards data to the Transport Layer.
- **Transport Layer**: Reassembles segments, checks for errors, and ensures data is complete.
- **Application Layer**: Delivers the final data to the correct application (e.g., displays a web page in the browser).

Why TCP/IP is Used Over the OSI Model

TCP/IP is used over the OSI model because it is simpler, practical, and widely adopted for real-world networking and the internet. The diagram below shows the comparison of OSI layer with the TCP:

Illustration of Relationship between OSI and TCP/IP Protocol

Reason	Explanation
Simpler Structure	TCP/IP has only 5 layers, compared to 7 in OSI, making it easier to implement and understand in real systems.
Protocol-Driven Design	TCP/IP was designed based on working protocols, while the OSI model is more of a theoretical framework.
Flexibility and Robustness	TCP/IP adapts well to different hardware and networks and includes error handling, routing, and congestion control.
Open Standard	TCP/IP is open, free to use, and not controlled by any single organization, helping it gain universal acceptance.
Actual Use vs Conceptual Model	The OSI model is great for education and design principles, but TCP/IP is the one actually used in real-world networking.

Advantages of TCP/IP Model

- **Interoperability**: The TCP/IP model allows different types of computers and networks to communicate with each other, promoting compatibility and cooperation among diverse systems.
- **Scalability**: TCP/IP is highly scalable, making it suitable for both small and large networks, from local area networks (LANs) to wide area networks (WANs) like the internet.
- **Standardization**: It is based on open standards and protocols, ensuring that different devices and software can work together without compatibility issues.
- **Flexibility**: The model supports various routing protocols, data types, and communication methods, making it adaptable to different networking needs.
- **Reliability**: TCP/IP includes error-checking and retransmission features that ensure reliable data transfer, even over long distances and through various network conditions.

Disadvantages of TCP/IP Model

- **Security Concerns:** TCP/IP was not originally designed with security in mind. While there are now many security protocols available (such as SSL/TLS), they have been added on top of the basic TCP/IP model, which can lead to vulnerabilities.
- **Inefficiency for Small Networks**: For very small networks, the overhead and complexity of the TCP/IP model may be unnecessary and inefficient compared to simpler networking protocols.
- **Limited by Address Space**: Although IPv6 addresses this issue, the older IPv4 system has a limited address space, which can lead to issues with address exhaustion in larger networks.
- **Data Overhead**: TCP the transport protocol, includes a significant amount of overhead to ensure reliable transmission.